Status: Currently Official on 12-Feb-2025
Official Date: Official as of 01-Oct-2023
Document Type: General Chapter
DocId: GUID-67466D06-7DCC-46C2-A61F-013D827120C6_2_en-US
DOI: https://doi.org/10.31003/USPNF_M1757_02_01
DOI Ref: rqxvc

© 2025 USPC
Do not distribute

⟨660⟩ CONTAINERS—GLASS

Change to read:

DESCRIPTION

▲Glass containers for pharmaceutical use are intended to come into direct contact with pharmaceutical products.▲ (IRA 1-Oct-2023) The following recommendations can be made as to the suitability of ▲a▲ (IRA 1-Oct-2023) glass ▲container▲ (IRA 1-Oct-2023) for pharmaceutical products, based on the tests for hydrolytic resistance. ▲Glass▲ (IRA 1-Oct-2023) containers ▲meeting Type I performance▲ (IRA 1-Oct-2023) are suitable for most products for parenteral and nonparenteral uses ▲(e.g., borosilicate). Glass▲ (IRA 1-Oct-2023) containers ▲meeting Type II performance▲ (IRA 1-Oct-2023) are suitable for most acidic and neutral aqueous products for parenteral and nonparenteral uses ▲(e.g., treated soda-lime silica). Glass▲ (IRA 1-Oct-2023) containers ▲meeting Type II performance▲ (IRA 1-Oct-2023) may be used for alkaline parenteral products where stability data demonstrate their suitability. ▲Glass▲ (IRA 1-Oct-2023) containers ▲meeting Type III performance (e.g., soda-lime silica)▲ (IRA 1-Oct-2023) usually are not used for parenteral products or for powders for parenteral use, except where suitable stability test data indicate that ▲containers meeting Type III performance are▲ (IRA 1-Oct-2023) satisfactory.

The inner surface of glass containers may be treated to improve hydrolytic resistance. The outer surface of glass containers may be treated to reduce friction or for protection against abrasion or breakage. The outer surface treatment is such that it does not contaminate the inner surface of the container.

Information on chemical composition of glass types, the formation of glass containers, and factors that influence inner surface durability of glass containers is provided in *Evaluation of the Inner Surface Durability of Glass Containers ⟨1660⟩*. This chapter also contains recommended approaches to evaluate the potential of a drug product to cause the formation of glass particles and delamination.

Glass may be colored to provide protection from light by the addition of small amounts of metal oxides and is tested as described in *Spectral Transmission for Colored Glass Containers*. A clear and colorless container that is made light resistant by means of an opaque enclosure (see *Packaging and Storage Requirements ⟨659⟩, General Definitions, Packaging Definitions, Light-resistant container*) is exempt from the requirements for spectral transmission.

Change to read:

SPECIFIC TESTS

The *Glass Grains Test* combined with the *Surface Glass Test* for hydrolytic resistance determines glass ▲performance.▲ (IRA 1-Oct-2023) The hydrolytic resistance is determined by the quantity of alkali released from the glass under the conditions specified. This quantity of alkali is extremely small in the case of the more resistant glasses, thus calling for particular attention to all details of the tests and the use of apparatus of high quality and precision. Conducting these tests in conjunction with a glass standard reference material (SRM) on a routine basis will help to ensure the accuracy of the method. Reference materials are available for both borosilicate glass (SRM 623) and soda-lime-silica glass (SRM 622) from the National Institute of Standards and Technology. The tests should be conducted in an area relatively free from fumes and excessive dust. Test selection is shown in *Table 1* and *Table 2*.

Table 1. Determination of Glass ▲Performance▲ (IRA 1-Oct-2023)

▲Performance▲ (IRA 1-Oct-2023) Type	Test	Reason
I, II, III	*Glass Grains Test*	Distinguishes Type I ▲▲ (IRA 1-Oct-2023) from Type II and III ▲▲ (IRA 1-Oct-2023)

The inner surface of glass containers is the contact surface for pharmaceutical preparations, and the quality of this surface is determined by the *Surface Glass Test* for hydrolytic resistance. The *Surface Etching Test* may be used to determine whether high hydrolytic resistance is due to chemical composition or to surface treatment. Alternatively, the comparison of data from the *Glass Grains Test* and the *Surface Glass Test* may be used in *Table 2*.

Table 2. Determination of Inner Surface Hydrolytic Resistance

▲**Performance**▲ (IRA 1-Oct-2023) **Type**	**Test**	**Reason**
I, II, III	*Surface Glass Test*	Determines hydrolytic resistance of inner surface; distinguishes between *Type I* and *Type II* containers with high hydrolytic resistance and *Type III* containers with moderate hydrolytic resistance
I, II	*Surface Etching Test* or comparison of *Glass Grains Test* and *Surface Glass Test* data	Where it is necessary, determines whether high hydrolytic resistance is due to inner surface treatment or to the chemical composition of the glass containers

Glass containers must comply with their respective specifications for ▲▲ (IRA 1-Oct-2023) surface hydrolytic resistance ▲as noted in *Table 1* and *Table 2*.▲ (IRA 1-Oct-2023) Type I or Type II containers for aqueous parenteral products are tested for extractable arsenic.

Hydrolytic Resistance

APPARATUS

Autoclave: For these tests, use an autoclave capable of maintaining a temperature of 121 ± 1°, equipped with a thermometer, or a calibrated thermocouple device, allowing a temperature measurement independent of the autoclave system; a suitable recorder; a pressure gauge; a vent cock; and a tray of sufficient capacity to accommodate the number of containers needed to carry out the test above the water level. Clean the autoclave and other apparatus thoroughly with purified water before use.

Mortar and pestle: Use a hardened-steel mortar and pestle, made according to the specifications in *Figure 1*.

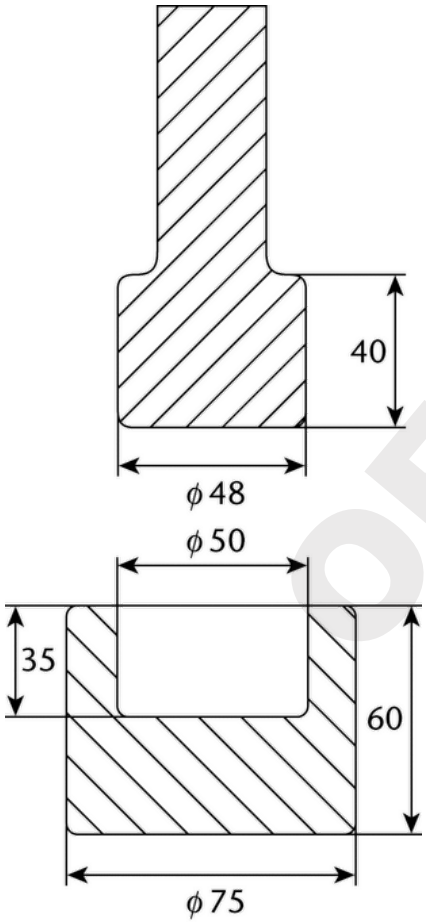

Figure 1. Mortar and pestle for pulverizing glass.

Other apparatus: Also required are a set of three square-mesh stainless steel sieves mounted on frames consisting of US Sieve Nos. 25, 40, and 50 (see *Particle Size Distribution Estimation by Analytical Sieving ⟨786⟩*, *Table 1. Sizes of Standard Sieve Series in Range of Interest*); a mechanical sieve-shaker or a sieving machine that may be used to sieve the grains; a tempered, magnetic steel hammer; a permanent magnet; weighing bottles; stoppers; metal foil (e.g., aluminum, stainless steel); a hot air oven, capable of maintaining 140 ± 5°; a balance, capable of weighing up to 500 g with an accuracy of 0.005 g; a desiccator; and an ultrasonic bath.

OFFICIAL

REAGENTS

Carbon dioxide-free water: This is purified water that has been boiled vigorously for 5 min or more and allowed to cool while protected from absorption of carbon dioxide from the atmosphere, or purified water that has a resistivity of not less than 18 Mohm-cm.

Methyl red solution: Dissolve 50 mg of methyl red in 1.86 mL of 0.1 M sodium hydroxide and 50 mL of ethanol (96%), and dilute with purified water to 100 mL. To test for sensitivity, add 100 mL of carbon dioxide-free water and 0.05 mL of 0.02 M hydrochloric acid to 0.1 mL of the methyl red solution. The resulting solution should be red. NMT 0.1 mL of 0.02 M sodium hydroxide is required to change the color to yellow. A color change from red to yellow corresponds to a change in pH from pH 4.4 (red) to pH 6.0 (yellow).

Glass Grains Test

The *Glass Grains Test* may be performed either on the canes used for the manufacture of tubing glass containers or on the containers.

SAMPLE PREPARATION

Rinse the containers to be tested with purified water, and dry in the oven. Wrap at least three of the glass articles in clean paper, and crush to produce two samples of about 100 g each in pieces NMT 30 mm across. Place in the mortar 30–40 g of the pieces between 10 and 30 mm across taken from one of the samples, insert the pestle, and strike it heavily with the hammer once only. Alternatively, transfer samples into a ball mill-breaker, add the balls, and crush the glass. Transfer the contents of the mortar or ball mill to the coarsest sieve (No. 25) of the set. Repeat the operation until all fragments have been transferred to the sieve. Shake the set of sieves for a short time by hand, and remove the glass that remains on sieves No. 25 and No. 40. Submit these portions to further fracture, repeating the operation until about 10 g of glass remains on sieve No. 25. Reject this portion and the portion that passes through sieve No. 50. Reassemble the set of sieves, and shake for 5 min. Transfer to a weighing bottle the glass grains that passed through sieve No. 40 and are retained on sieve No. 50. Repeat the crushing and sieving procedure with the second glass sample until two samples of grains are obtained, each of which weighs more than 10 g.

Spread each sample on a piece of clean glazed paper, and remove any iron particles by passing the magnet over them. Transfer each sample into a beaker for cleaning. Add 30 mL of acetone to the grains in each beaker, and scour the grains, using suitable means such as a rubber-tipped or plastic-coated glass rod. After scouring the grains, allow to settle, and decant as much acetone as possible. Add another 30 mL of acetone, swirl, decant, and add a new portion of acetone. Fill the bath of the ultrasonic vessel with water at room temperature, then place the beaker in the rack, and immerse it until the level of the acetone is at the level of the water; apply the ultrasound for 1 min. Swirl the beaker, allow to settle, and decant the acetone as completely as possible; then repeat the ultrasonic cleaning operation. If a fine turbidity persists, repeat the ultrasonic cleaning and acetone washing until the solution remains clear. Swirl, and decant the acetone. Dry the grains, first by putting the beaker on a warm plate, then by heating at 140° for 20 min in a drying oven. Transfer the dried grains from each beaker into separate weighing bottles, insert the stoppers, and cool in a desiccator.

METHOD

Filling and heating: Weigh 10.00 g of the cleaned and dried grains into two separate conical flasks. Pipet 50 mL of carbon dioxide-free purified water into each of the conical flasks (test solutions). Pipet 50 mL of carbon dioxide-free purified water into a third conical flask that will serve as a blank. Distribute the grains evenly over the flat bases of the flasks by shaking gently. Close the flasks with neutral glass dishes or aluminum foil rinsed with purified water or with inverted beakers so that the inner surfaces of the beakers fit snugly down onto the top rims of the flasks. Place all three flasks in the autoclave containing the water at ambient temperature, and ensure that they are held above the level of the water in the vessel. Carry out the following operations:

1. Insert the end of a calibrated thermometric device in a filled container through a hole of approximately the diameter of the thermocouple and connect it to an external measuring device. If the container is too small to insert a thermocouple, apply a thermocouple in a suitable, similar container. Alternatively, use the internal thermometer of the autoclave.
2. Close the autoclave door or lid securely but leave the vent-cock open.
3. Start automatic recording of the temperature versus time, and heat the autoclave at a regular rate such that steam issues vigorously from the vent-cock after 20–30 min, and maintain a vigorous evolution of steam for a further 10 min. For autoclaves using a steam generator, it is not necessary to maintain the temperature for 10 min at 100°.
4. Close the vent-cock, and raise the temperature from 100° to 121° at a rate of 1°/min within 20–22 min.
5. Maintain the temperature at 121 ± 1° for 30 ± 1 min from the time when the holding temperature is reached.
6. Cool down to 100° at a rate of 0.5°/min, venting to prevent formation of a vacuum, within 40–44 min.
7. Do not open the autoclave until it has cooled to 95°.
8. Remove the hot samples from the autoclave using appropriate safety precautions, and cool the samples cautiously down to room temperature within 30 min, avoiding thermal shock.

Titration: To each of the three flasks add 0.05 mL of *Methyl red solution*. Titrate the blank solution immediately with 0.02 M hydrochloric acid, then titrate the test solutions until the color matches that obtained with the blank solution. Subtract the titration volume for the blank solution from that for the test solutions. Calculate the mean value of the results in mL of 0.02 M hydrochloric acid per g of the sample. Repeat the test if the highest and lowest observed values differ by more than the permissible range given in *Table 3*.

Table 3. Permissible Range for Values Obtained

OFFICIAL

Mean of the Values Obtained for the Consumption of Hydrochloric Acid Solution per g of Glass Grains (mL/g)	Permissible Range of the Values Obtained
NMT 0.10	25% of the mean
0.10–0.20	20% of the mean
NLT 0.20	10% of the mean

[Note—Where necessary to obtain a sharp endpoint, decant the clear solution into a separate 250-mL flask. Rinse the grains by swirling with three 15-mL portions of carbon dioxide-free water, and add the washings to the main solution. Add 0.05 mL of the *Methyl red solution*. Titrate, and calculate as before. In this case also add 45 mL of carbon dioxide-free purified water and 0.05 mL of *Methyl red solution* to the blank solution.]

LIMITS

The volume does not exceed the values indicated in *Table 4*.

Table 4. Test Limits for Glass Grains Test

Filling Volume (mL)	Maximum Volume of 0.02 M HCl per g of Test Glass (mL)	
	Type I	Types II and III
All	0.1	0.85

Surface Glass Test

DETERMINATION OF THE FILLING VOLUME

The filling volume is the volume of purified water to be added to the container for the purpose of the test. For vials, bottles, cartridges, and syringes, the filling volume is 90% of the brimful capacity. For ampules, it is the volume up to the height of the shoulder.

Vials and bottles: Select six dry vials or bottles from the sample lot, or three if their capacity exceeds 100 mL, and remove any dirt or debris. Weigh the empty containers with an accuracy of 0.1 g. Place the containers on a horizontal surface, and fill them with purified water to about the rim edge, avoiding overflow and the introduction of air bubbles. Adjust the liquid levels to the brimful line. Weigh the filled containers to obtain the mass of the water expressed to two decimal places, for containers having a nominal volume less than or equal to 30 mL, and expressed to one decimal place, for containers having a nominal volume greater than 30 mL. Calculate the mean value of the brimful capacity in mL, and multiply it by 0.9. This volume, expressed to one decimal place, is the filling volume for the particular container lot.

Cartridges and syringes: Select six dry syringes or cartridges, and seal the small opening (mouth of cartridges, Luer cone, or staked needle of syringes), using an inert material. Determine the mean brimful capacity and filling volume according to *Vials and Bottles*.

Ampules: Place at least six dry ampules on a flat, horizontal surface, and fill them with purified water from a buret until the water reaches point A, where the body of the ampule starts to decrease to the shoulder of the ampule (see *Figure 2*). Read the capacities, expressed to two decimal places, and calculate the mean value. This volume, expressed to one decimal place, is the filling volume for the particular ampule

OFFICIAL

lot. The filling volume may also be determined by weighing.

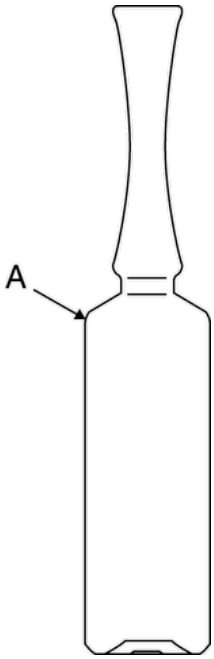

Figure 2. Filling volumes of ampules up to point A.

TEST

The determination is carried out on unused containers. The volumes of the test solution necessary for the final determination are shown in *Table 5*.

Table 5. Volume of Test Solution and Number of Titrations

Filling Volume (mL)	Volume of Test Liquid for One Titration (mL)	Number of Titrations
NMT 3	25.0	1
3–30	50.0	2
30–100	100.0	2
NLT 100	100.0	3

METHOD

Cleaning: Remove any debris or dust. Shortly before the test, rinse each container carefully at least twice with purified water, refilled, and allow to stand. Immediately before testing, empty the containers; rinse once with purified water, then with carbon dioxide-free water; and allow to drain. Complete the cleaning procedure from the first rinsing within 20–30 min. Closed ampules may be warmed in a water bath or in an air oven at about 40° for approximately 2 min before opening to avoid container pressure when opening. Do not rinse before testing.

Filling and heating: The containers are filled with carbon dioxide-free water up to the filling volume. Containers in the form of cartridges or prefillable syringes are closed in a suitable manner with material that does not interfere with the test. Each container, including ampules, shall be loosely capped with an inert material such as a dish of neutral glass or aluminum foil previously rinsed with purified water. Place the containers on the tray of the autoclave. Place the tray in an autoclave containing a quantity of water such that the tray remains clear of the water. Close the autoclave, and carry out autoclaving procedure steps 1–8 as described in the *Glass Grains Test*, except that the temperature is maintained at 121 ± 1° for 60 ± 1 min. If a water bath is used for cooling samples, take care that the water does not make contact with the loose foil caps to avoid contamination of the extraction solution. The extraction solutions are analyzed by titration according to the method described below.

Titration: Carry out the titration within 1 h of the removal of the containers from the autoclave. Combine the liquids obtained from the containers, and mix. Introduce the prescribed volume (see *Table 5*) into a conical flask. Transfer the same volume of carbon dioxide-free water, to be used as a blank, into a second similar flask. Add to each flask 0.05 mL of *Methyl red solution* for each 25 mL of liquid. Titrate the blank with 0.01 M hydrochloric acid. Titrate the test solution with the same acid until the color of the resulting solution is the same as that obtained for the blank. Subtract the value found for the blank titration from that found for the test solution, and express the results in mL of 0.01 M hydrochloric acid per 100 mL of test solution. Express titration values of less than 1.0 mL to two decimal places; express titration values of greater than or equal to 1.0 mL to one decimal place.

OFFICIAL

LIMITS

The results, or the average of the results if more than one titration is performed, are not greater than the values stated in *Table 6*.

Table 6. Limit Values for the Surface Glass Test

Filling Volume (mL)	Maximum Volume of 0.01 M HCl per 100 mL of Test Solution (mL)	
	Types I and II	Type III
NMT 1	2.0	20.0
1–2	1.8	17.6
2–3	1.6	16.1
3–5	1.3	13.2
5–10	1.0	10.2
10–20	0.80	8.1
20–50	0.60	6.1
50–100	0.50	4.8
100–200	0.40	3.8
200–500	0.30	2.9
NLT 500	0.20	2.2

Surface Etching Test

The *Surface Etching Test* is used in addition to the *Surface Glass Test* when it is necessary to determine whether a container has been surface treated and/or to distinguish between Type I and Type II glass containers. Alternatively, the *Glass Grains Test* and *Surface Glass Test* may be used. The *Surface Etching Test* may be carried out either on unused samples or on samples used in the *Surface Glass Test*.

METHOD

Vials and bottles: The volumes of test solution required are shown in *Table 5*. Rinse the containers twice with purified water, fill to the brimful point with a mixture of one volume of hydrofluoric acid and nine volumes of hydrochloric acid, and allow to stand for 10 min. Empty the containers, and rinse carefully five times with purified water. Immediately before the test, rinse once again with purified water. Submit these containers to the same autoclaving and determination procedure as described in the *Surface Glass Test*. If the results are considerably higher than those obtained from the original surfaces (by a factor of about 5–10), the samples have been surface treated.

[Caution—Hydrofluoric acid is extremely aggressive. Even small quantities can cause life threatening injuries.]

Ampules, cartridges, and syringes: Apply the test method as described in *Vials and Bottles*. If the ampules, cartridges, and syringes are not surface treated, the values obtained are slightly lower than those obtained in the previous tests.

[Note—Ampules, cartridges, and syringes made from Type I glass tubing are not normally subjected to internal surface treatment.]

DISTINCTION BETWEEN TYPE I AND TYPE II GLASS CONTAINERS

The results obtained from the *Surface Etching Test* are compared to those obtained from the *Surface Glass Test*. For Type I glass containers, the values obtained are close to those found in the *Surface Glass Test*. For Type II glass containers, the values obtained greatly exceed those found in the *Surface Glass Test*; and they are similar to, but not greater than, those obtained for Type III glass containers of the same filling volume.

IMPURITIES

Arsenic ⟨211⟩

Use as the *Test Preparation* 35 mL of the water from one Type I or Type II glass container, or, in the case of smaller containers, 35 mL of the combined contents of several Type I or Type II glass containers, prepared as directed in the *Surface Glass Test*. The limit does not exceed 0.1 µg/g.

OFFICIAL

FUNCTIONALITY

Spectral Transmission for Colored Glass Containers

APPARATUS

A UV-Vis spectrophotometer, equipped with either a photodiode detector or a photomultiplier tube coupled with an integrating sphere

SAMPLE PREPARATION

Break the glass container or cut it with a circular saw fitted with a wet abrasive wheel, such as a carborundum or a bonded diamond wheel. Select sections representative of the wall thickness, and trim them as suitable for mounting in a spectrophotometer. After cutting, wash and dry each specimen, taking care to avoid scratching the surfaces. If the specimen is too small to cover the opening in the specimen holder, mask the uncovered portion of the opening with opaque paper or tape, provided that the length of the specimen is greater than that of the slit. Before placing in the holder, wash, dry, and wipe the specimen with lens tissue. Mount the specimen with the aid of wax, or by other convenient means, taking care to avoid leaving fingerprints or other marks.

METHOD

Place the specimen in the spectrophotometer with its cylindrical axis parallel to the slit and in such a way that the light beam is perpendicular to the surface of the section and the losses due to reflection are at a minimum. Measure the transmission of the specimen with reference to air in the spectral region of 290–450 nm, continuously or at intervals of 20 nm.

LIMITS

The observed spectral transmission for colored glass containers for products for nonparenteral use does not exceed 10% at any wavelength in the range of 290–450 nm, irrespective of the type and capacity of the glass container. The observed spectral transmission in colored glass containers for parenteral products does not exceed the limits given in *Table 7*.

Table 7. Limits of Spectral Transmission for Colored Glass Containers for Parenteral Products

Nominal Volume (mL)	Maximum Percentage of Spectral Transmission at Any Wavelength between 290 and 450 nm	
	Flame-Sealed Containers	Containers with Closures
NMT 1	50	25
1–2	45	20
2–5	40	15
5–10	35	13
10–20	30	12
NLT 20	25	10

OFFICIAL

Auxiliary Information - Please check for your question in the FAQs before contacting USP.

Topic/Question	Contact	Expert Committee
<660> GLASS PACKAGING SYSTEMS AND THEIR MATERIALS OF CONSTRUCTION	Desmond G. Hunt Principal Scientific Liaison	GCPD2020 General Chapters - Packaging and Distribution

Most Recently Appeared In:
Pharmacopeial Forum: Volume No. 50(5)

Current DocID: GUID-67466D06-7DCC-46C2-A61F-013D827120C6_2_en-US
DOI: https://doi.org/10.31003/USPNF_M1757_02_01
DOI ref: rqxvc